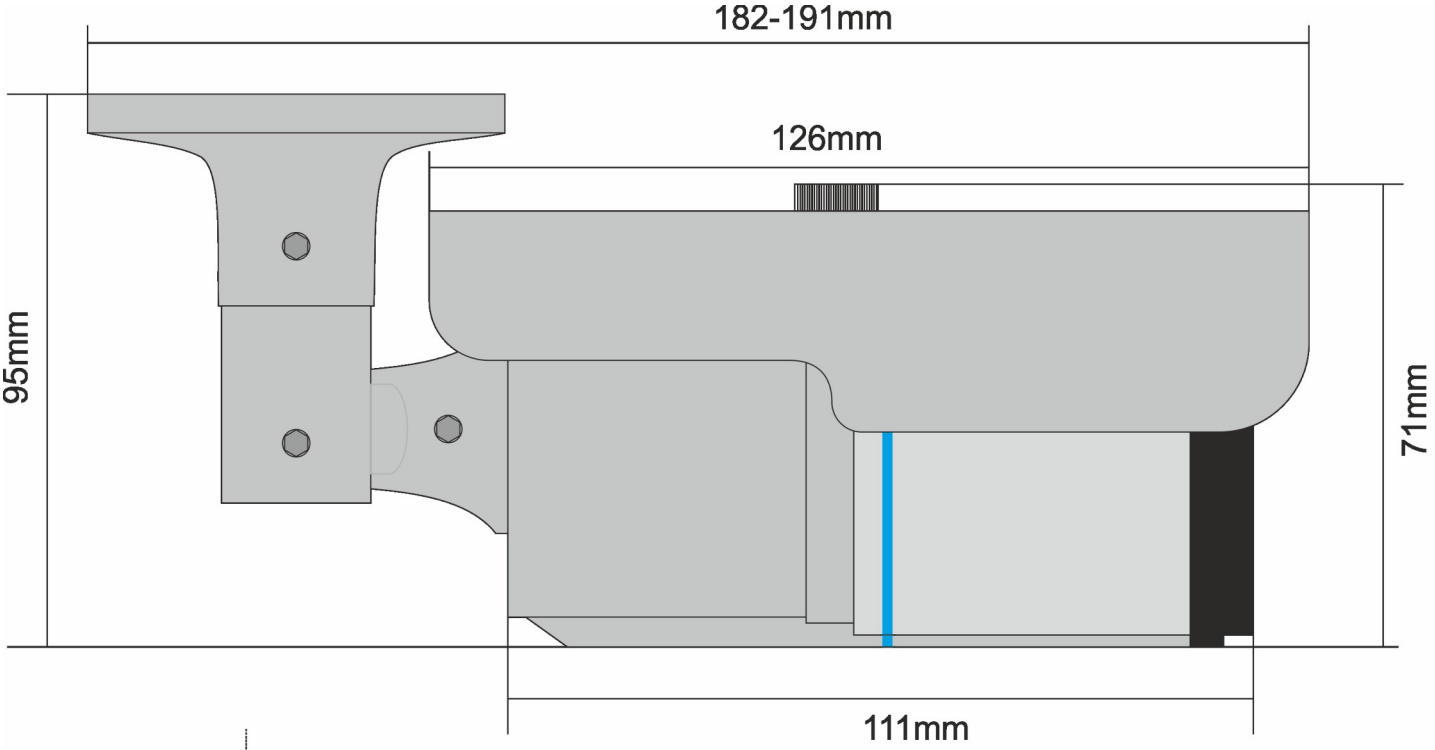
182-191mm
126mm
95mm
71mm
111mm

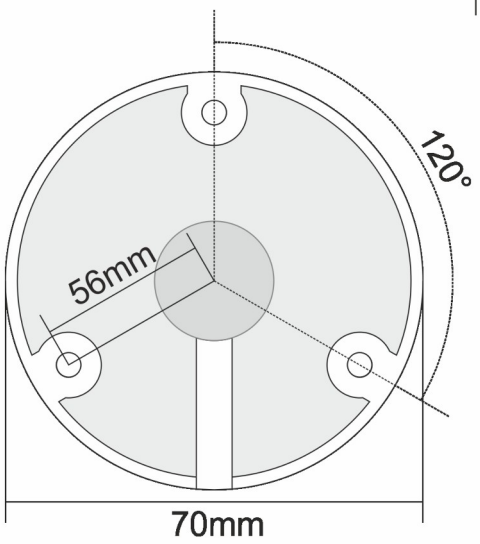
120°
56mm
70mm

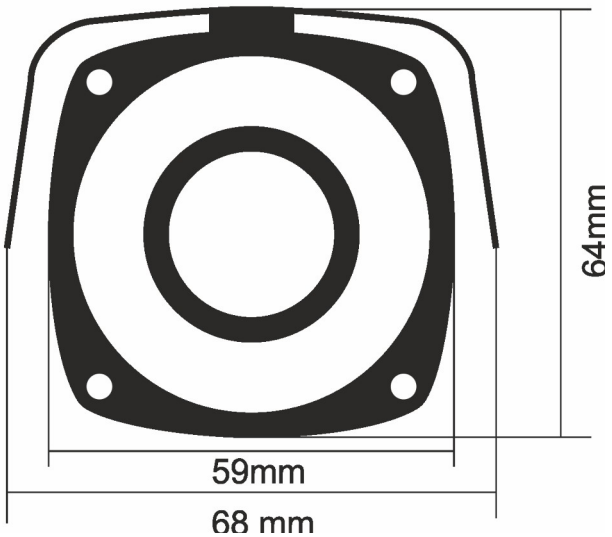
64mm
59mm
68 mm