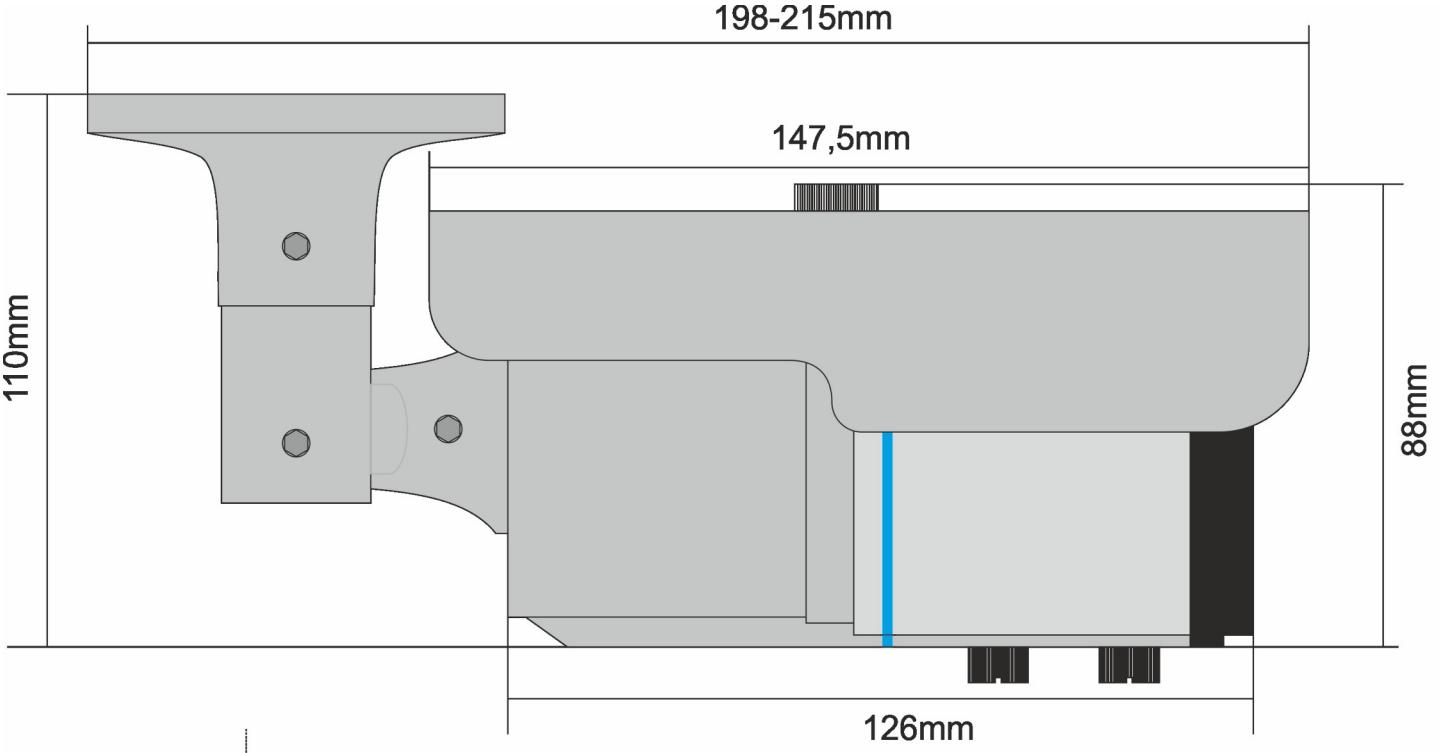
198-215mm
147,5mm
110mm
88mm
126mm

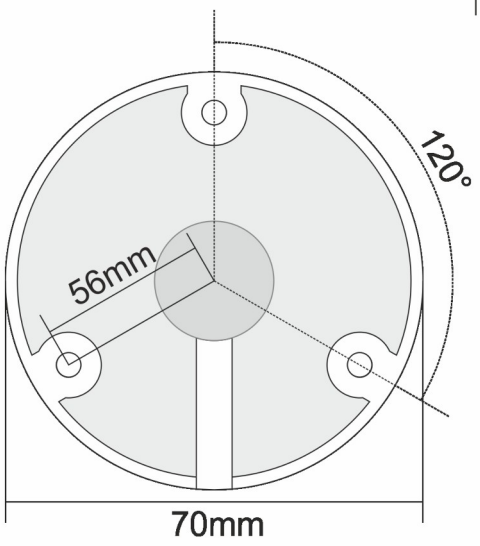
120°
56mm
70mm

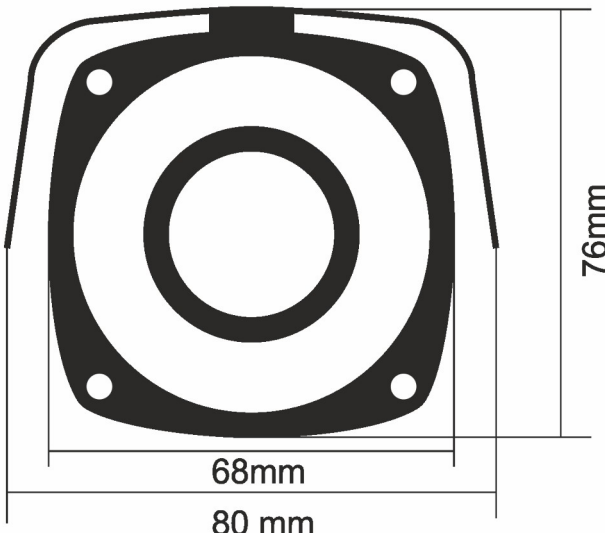
76mm
68mm
80 mm