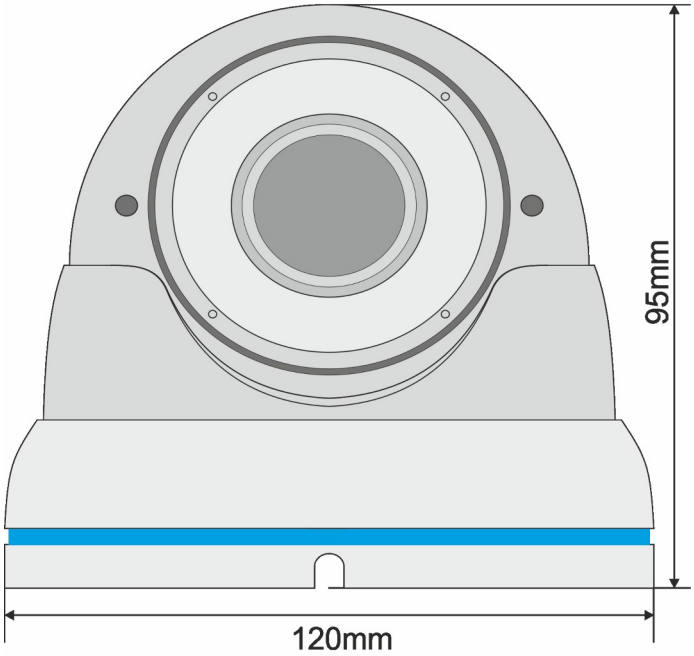
95mm
120mm

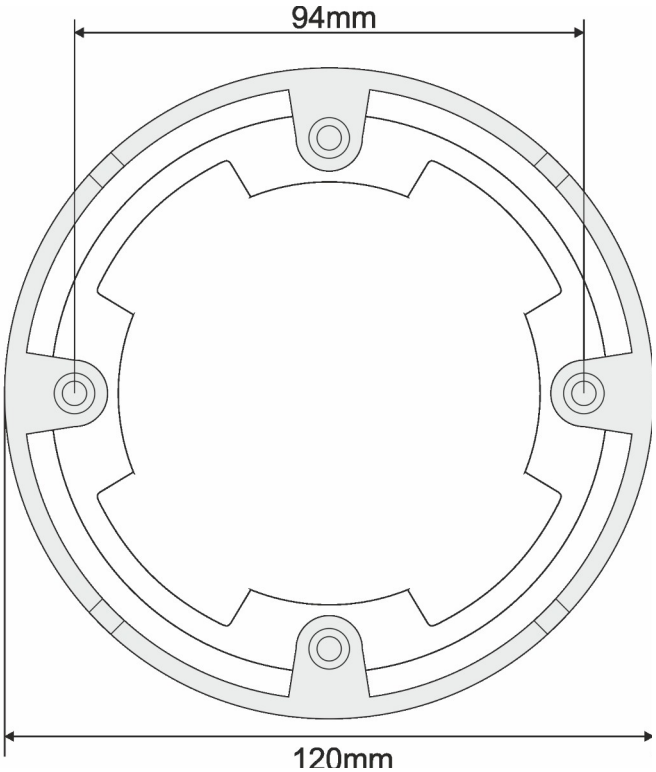
94mm
120mm