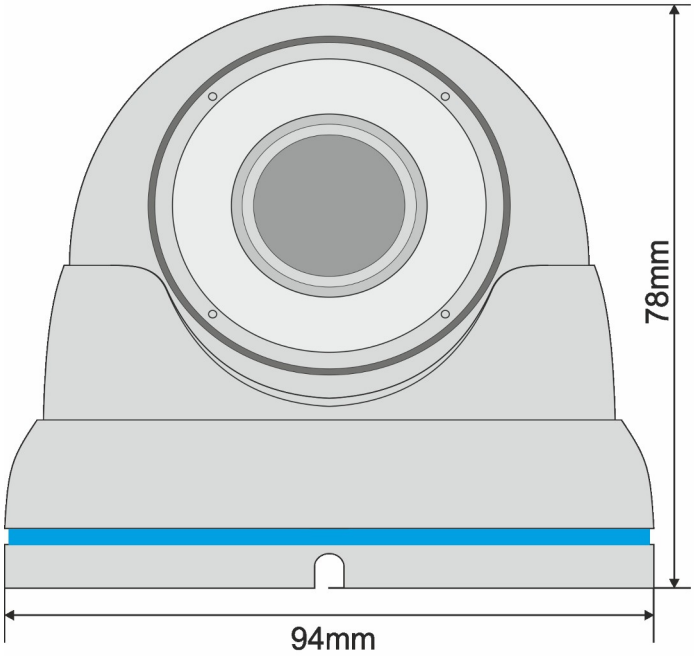
78mm
94mm

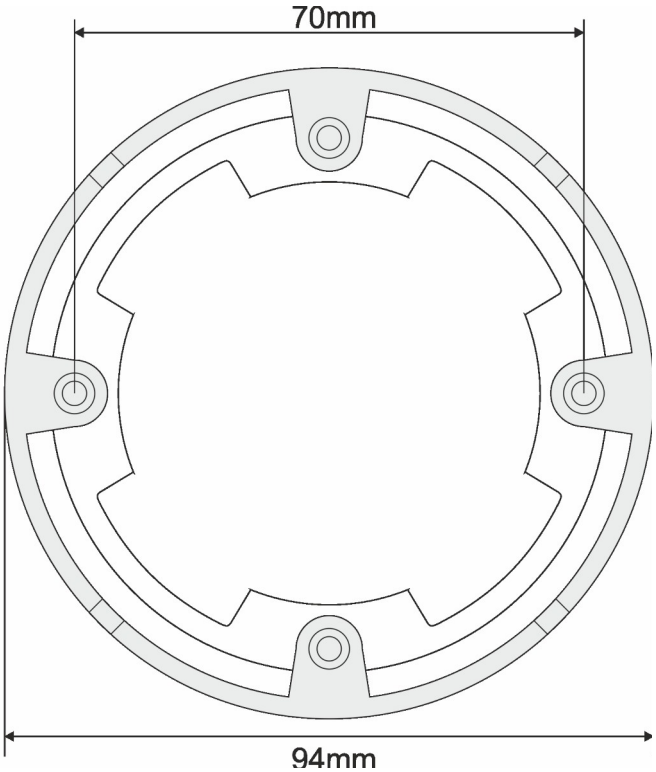
70mm
94mm