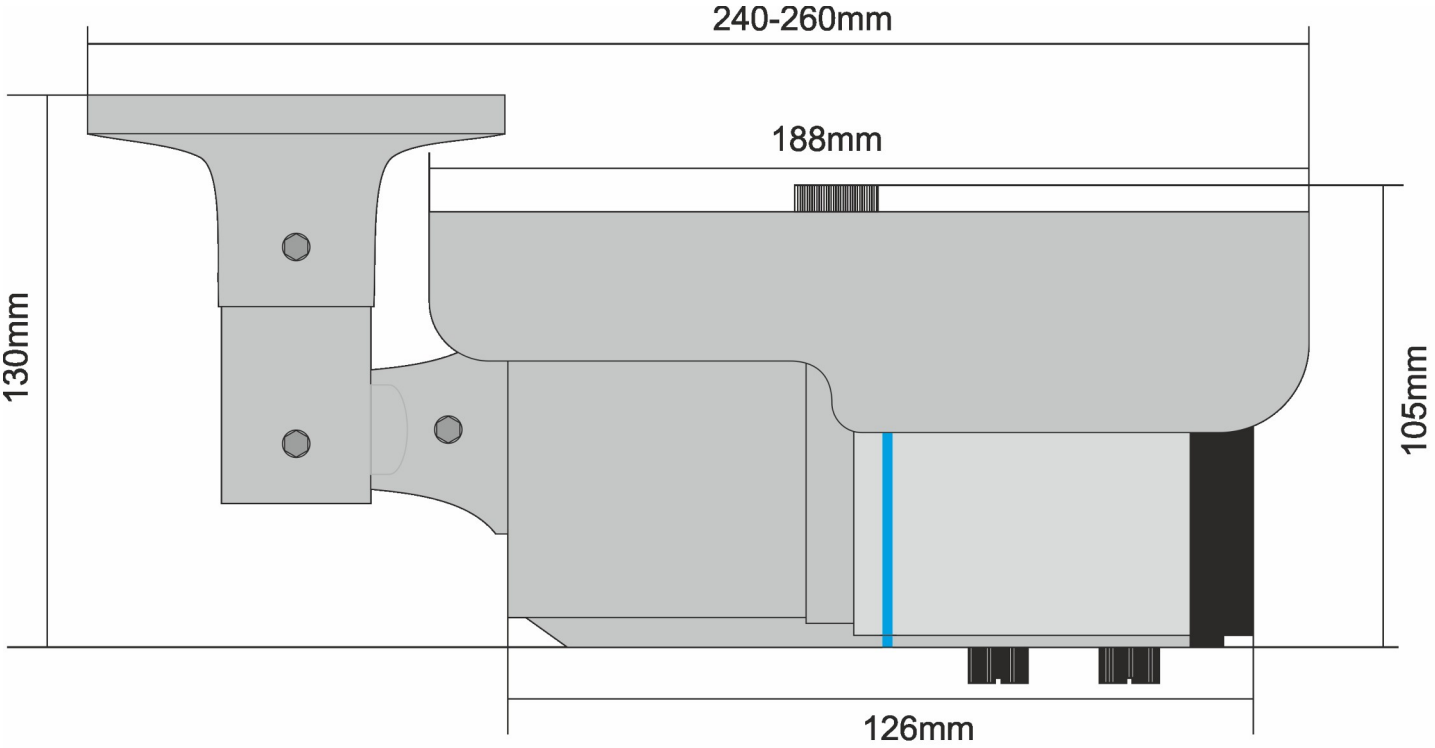
240-260mm
188mm
130mm
105mm
126mm

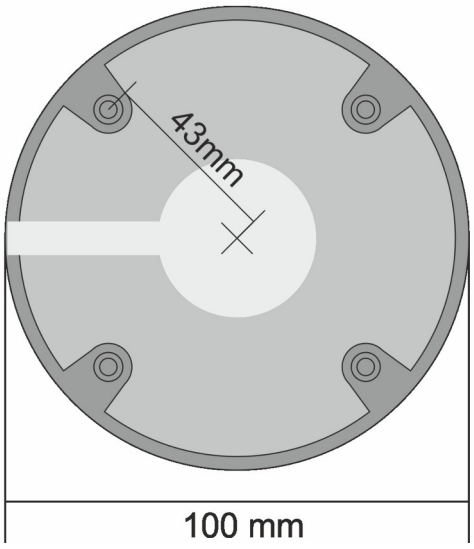
43mm
100 mm

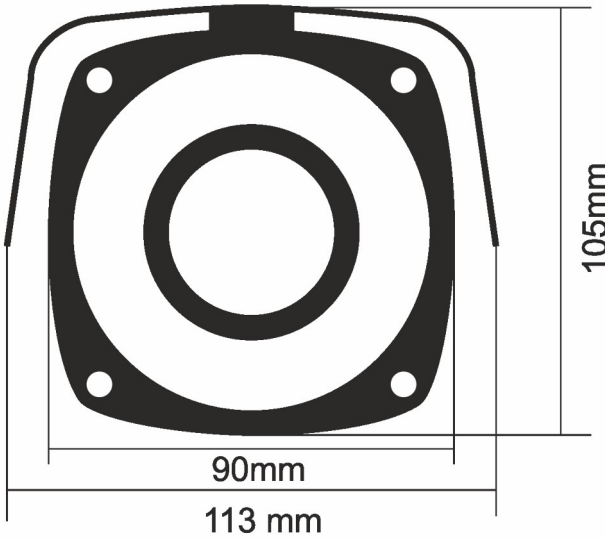
105mm
90mm
113 mm